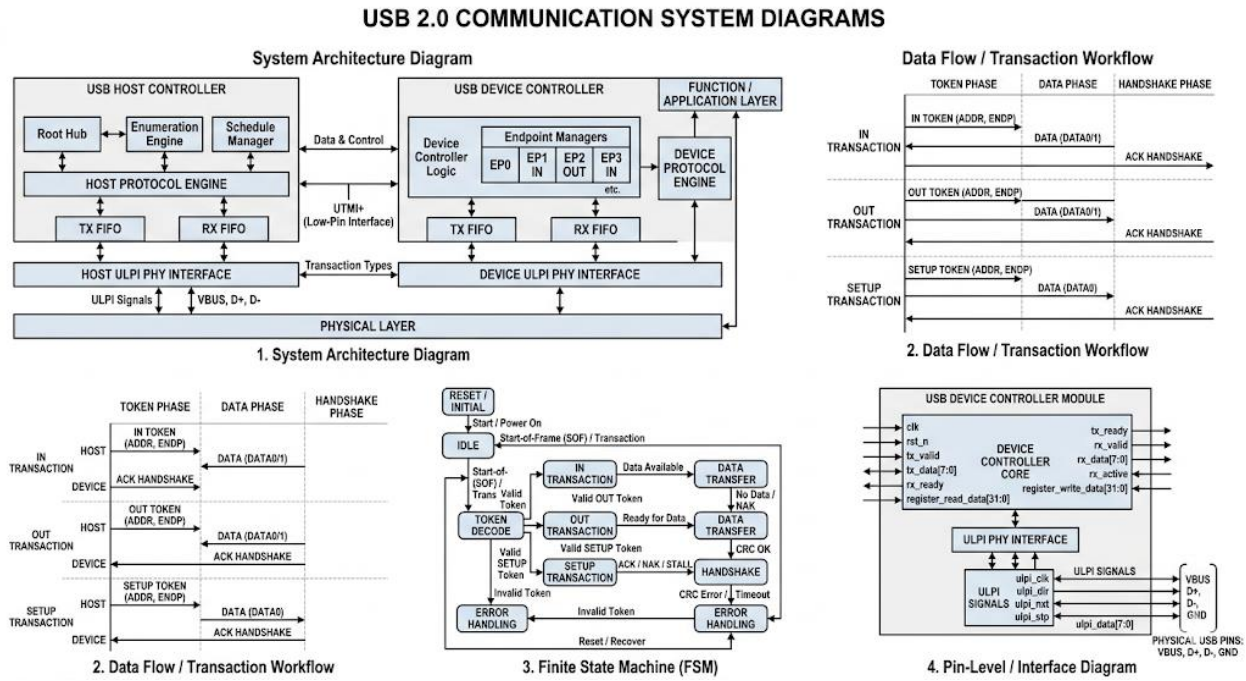

USB 2.0 system architecture and FSM diagram showing host, device, protocol layers, data flow, and control states.

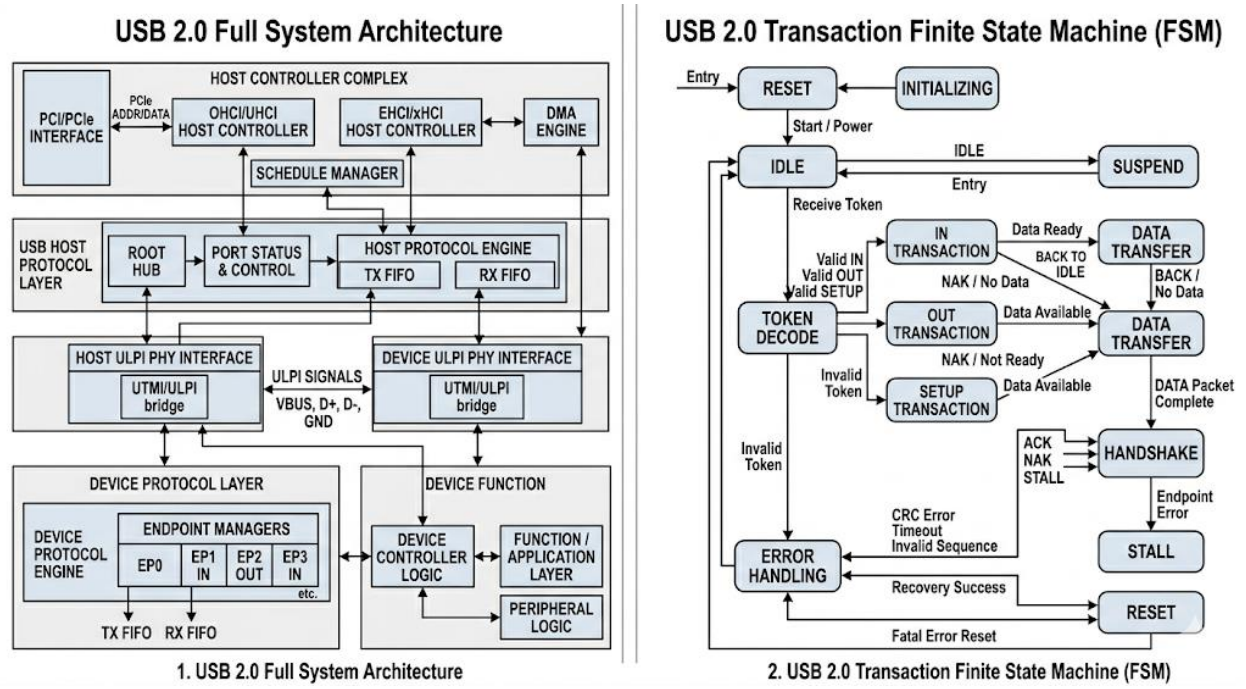

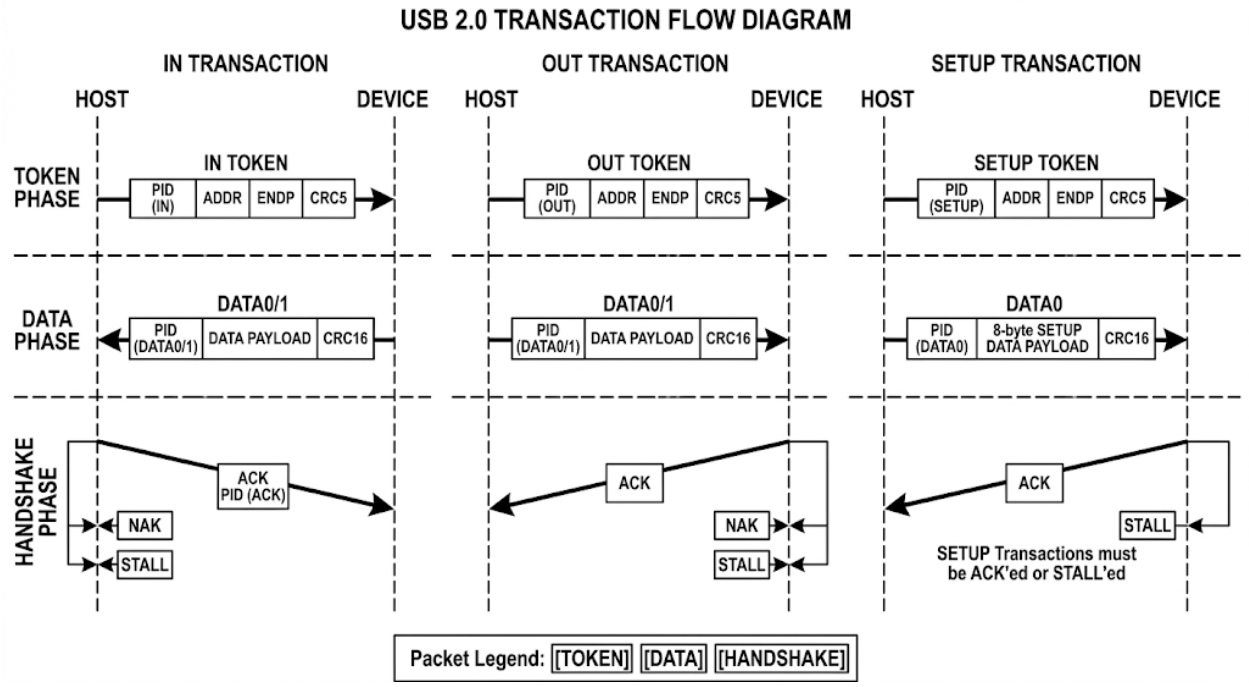
USB 2.0 TRANSACTION FLOW DIAGRAM
IN TRANSACTION
OUT TRANSACTION
SETUP TRANSACTION
HOST
DEVICE
TOKEN PHASE
IN TOKEN
PID (IN)
ADDR
ENDP
CRC5
OUT TOKEN
PID (OUT)
SETUP TOKEN
PID (SETUP)
DATA PHASE
DATA0/1
PID (DATA0/1)
DATA PAYLOAD
CRC16
DATA0
PID (DATA0)
8-byte SETUP DATA PAYLOAD
HANDSHAKE PHASE
ACK PID (ACK)
ACK
NAK
STALL
SETUP Transactions must be ACK'ed or STALL'ed
Packet Legend: [TOKEN] [DATA] [HANDSHAKE]

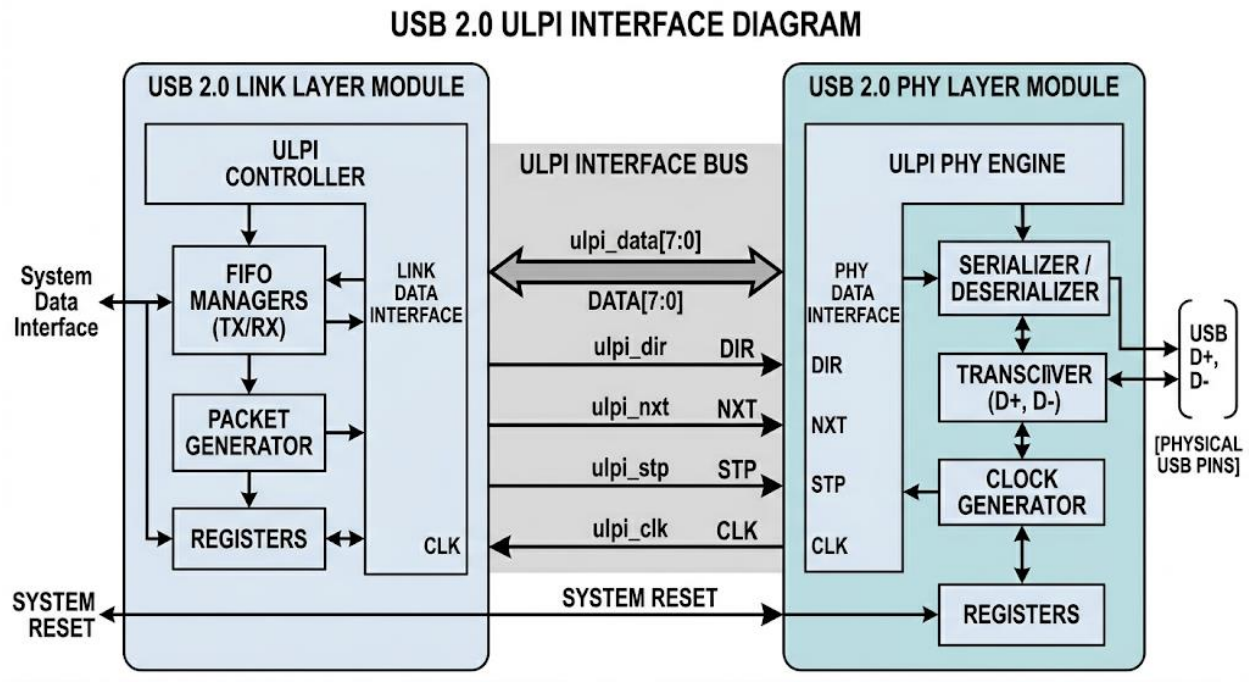
USB 2.0 ULPI INTERFACE DIAGRAM
USB 2.0 LINK LAYER MODULE
ULPI CONTROLLER
FIFO MANAGERS (TX/RX)
PACKET GENERATOR
REGISTERS
LINK DATA INTERFACE
CLK
System Data Interface
SYSTEM RESET
ULPI INTERFACE BUS
ulpi_data[7:0]
DATA[7:0]
ulpi_dir
DIR
ulpi_nxt
NXT
ulpi_stp
STP
ulpi_clk
CLK
SYSTEM RESET
USB 2.0 PHY LAYER MODULE
ULPI PHY ENGINE
PHY DATA INTERFACE
DIR
NXT
STP
CLK
SERIALIZER / DESERIALIZER
TRANSCIIVER (D+, D-)
CLOCK GENERATOR
REGISTERS
USB D+, D-
[PHYSICAL USB PINS]

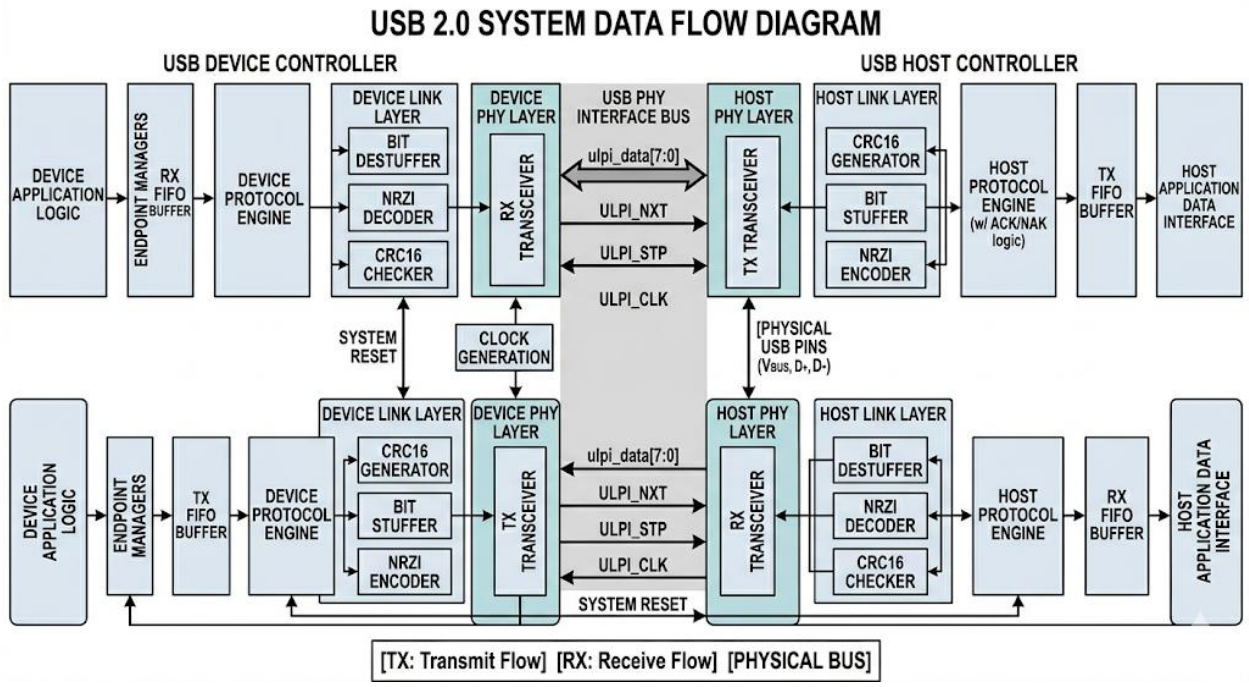
USB 2.0 SYSTEM DATA FLOW DIAGRAM
USB DEVICE CONTROLLER
USB HOST CONTROLLER
DEVICE APPLICATION LOGIC
ENDPOINT MANAGERS
RX FIFO BUFFER
DEVICE PROTOCOL ENGINE
DEVICE LINK LAYER
BIT DESTUFFER
NRZI DECODER
CRC16 CHECKER
DEVICE PHY LAYER
RX TRANSCEIVER
USB PHY INTERFACE BUS
ulpi_data[7:0]
ULPI_NXT
ULPI_STP
ULPI_CLK
HOST PHY LAYER
TX TRANSCEIVER
HOST LINK LAYER
CRC16 GENERATOR
BIT STUFFER
NRZI ENCODER
HOST PROTOCOL ENGINE (w/ ACK/NAK logic)
TX FIFO BUFFER
HOST APPLICATION DATA INTERFACE
SYSTEM RESET
CLOCK GENERATION
[PHYSICAL USB PINS (VBUS, D+, D-)
DEVICE APPLICATION LOGIC
ENDPOINT MANAGERS
TX FIFO BUFFER
DEVICE PROTOCOL ENGINE
DEVICE LINK LAYER
CRC16 GENERATOR
BIT STUFFER
NRZI ENCODER
DEVICE PHY LAYER
TX TRANSCEIVER
ulpi_data[7:0]
ULPI_NXT
ULPI_STP
ULPI_CLK
SYSTEM RESET
HOST PHY LAYER
RX TRANSCEIVER
HOST LINK LAYER
BIT DESTUFFER
NRZI DECODER
CRC16 CHECKER
HOST PROTOCOL ENGINE
RX FIFO BUFFER
HOST APPLICATION DATA INTERFACE
[TX: Transmit Flow] [RX: Receive Flow] [PHYSICAL BUS]

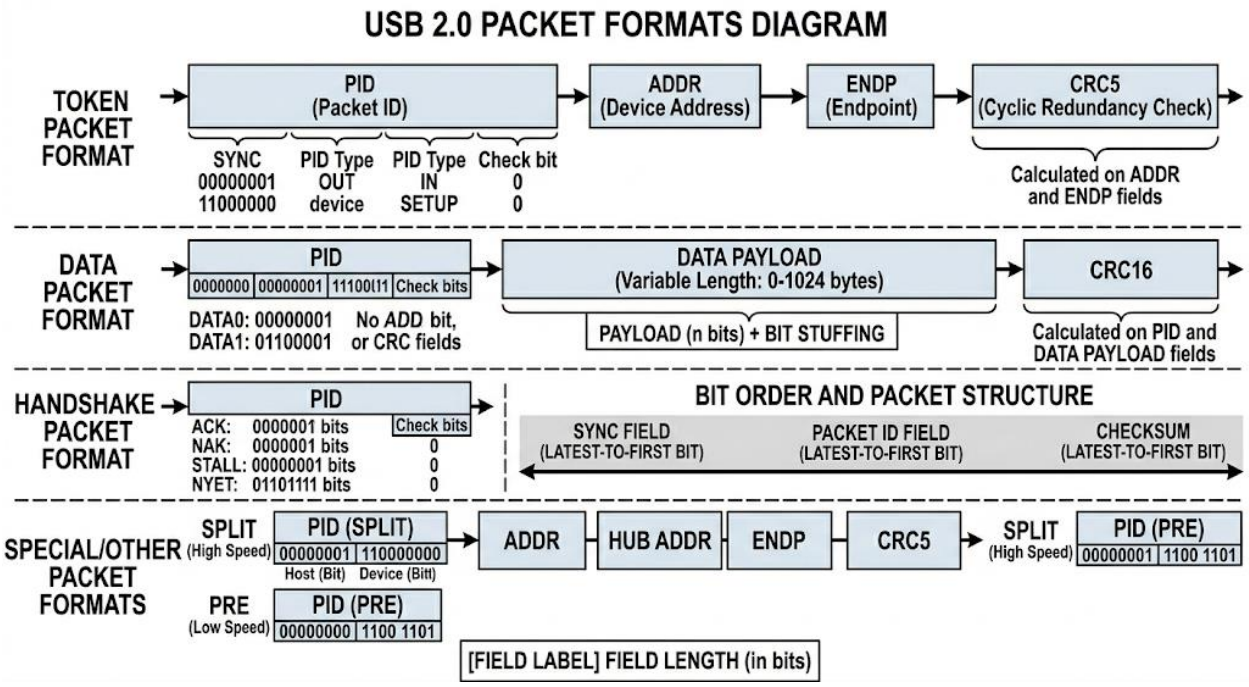
USB 2.0 PACKET FORMATS DIAGRAM
TOKEN PACKET FORMAT
PID (Packet ID)
ADDR (Device Address)
ENDP (Endpoint)
CRC5 (Cyclic Redundancy Check)
SYNC 00000001 11000000
PID Type OUT device
PID Type IN SETUP
Check bit 0 0
Calculated on ADDR and ENDP fields
DATA PACKET FORMAT
PID
0000000 00000001 11100111 Check bits
DATA0: 00000001
DATA1: 01100001
No ADD bit, or CRC fields
DATA PAYLOAD (Variable Length: 0-1024 bytes)
PAYLOAD (n bits) + BIT STUFFING
CRC16
Calculated on PID and DATA PAYLOAD fields
HANDSHAKE PACKET FORMAT
PID
ACK: 0000001 bits
NAK: 0000001 bits
STALL: 00000001 bits
NYET: 01101111 bits
Check bits
0
0
0
BIT ORDER AND PACKET STRUCTURE
SYNC FIELD (LATEST-TO-FIRST BIT)
PACKET ID FIELD (LATEST-TO-FIRST BIT)
CHECKSUM (LATEST-TO-FIRST BIT)
SPECIAL/OTHER PACKET FORMATS
SPLIT (High Speed)
PID (SPLIT)
00000001 110000000
Host (Bit) Device (Bitt)
ADDR
HUB ADDR
ENDP
CRC5
SPLIT (High Speed)
PID (PRE)
00000001 1100 1101
PRE (Low Speed)
PID (PRE)
00000000 1100 1101
[FIELD LABEL] FIELD LENGTH (in bits)

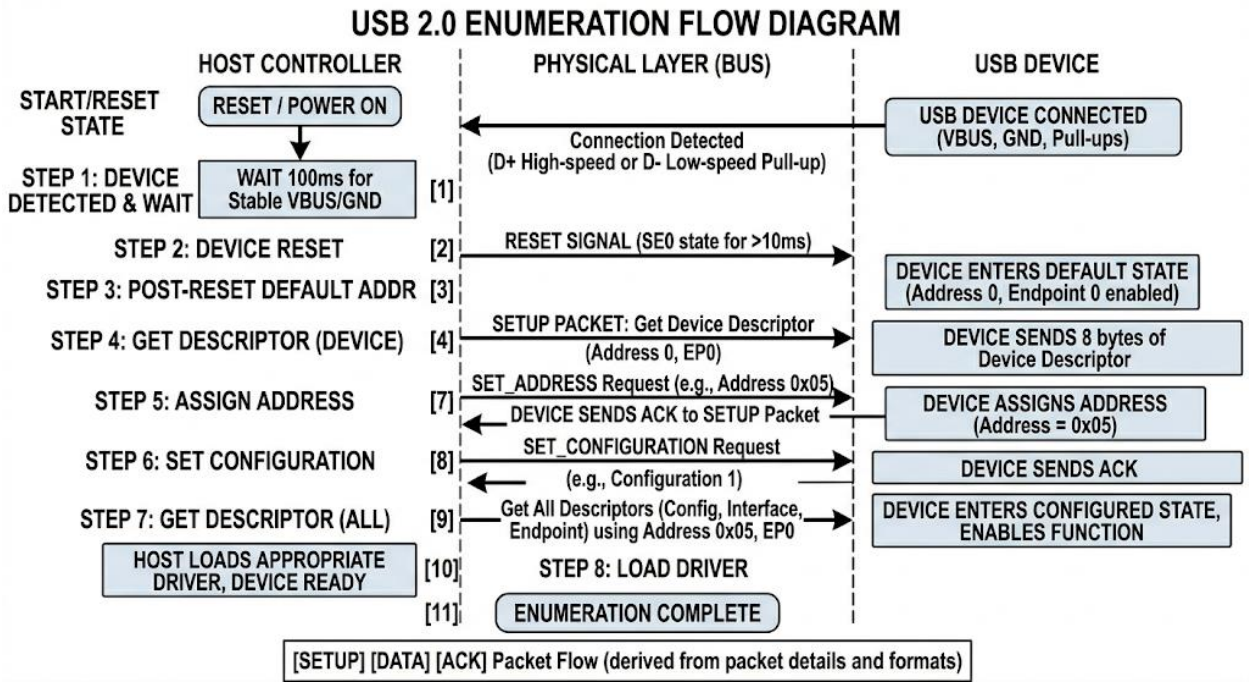

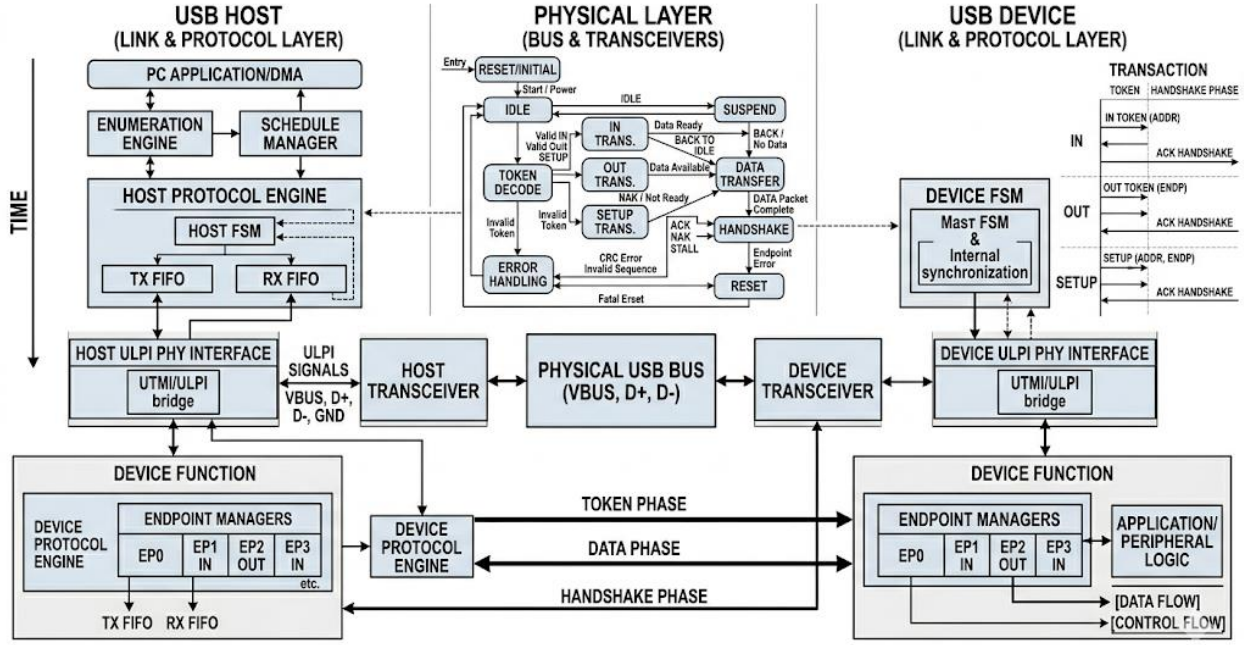

COMPLETE USB 2.0 SYSTEM UNIFIED DIAGRAM (Architecture, Data, Control)